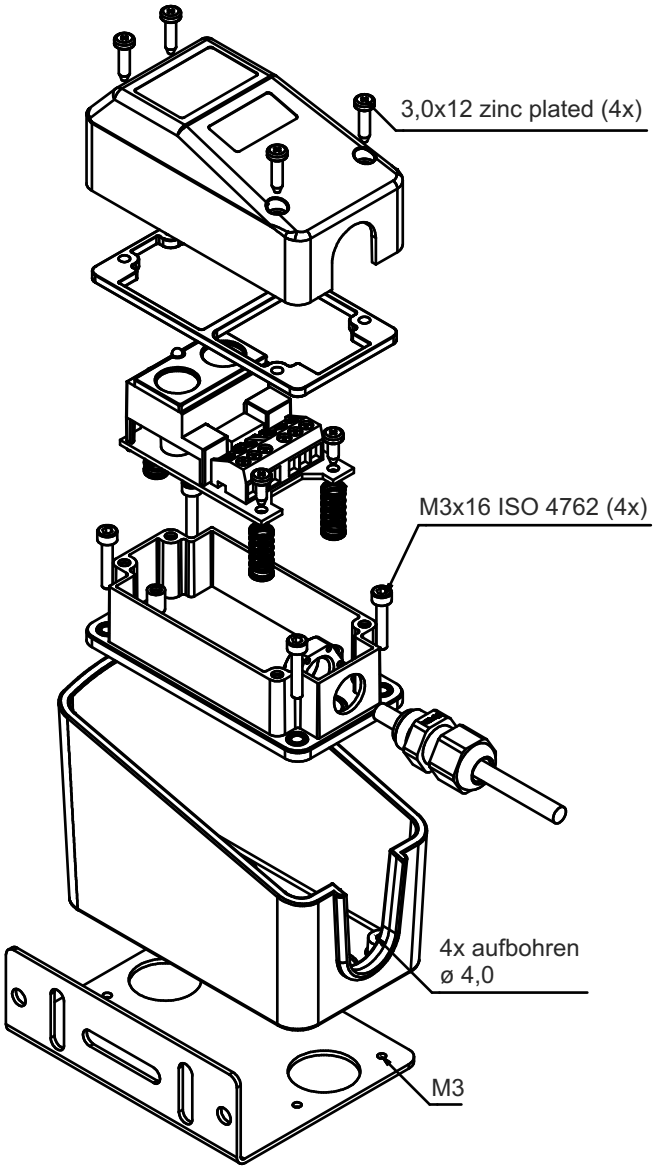
3,0x12 zinc plated (4x)
M3x16 ISO 4762 (4x)
4x aufbohren
ø 4,0
M3

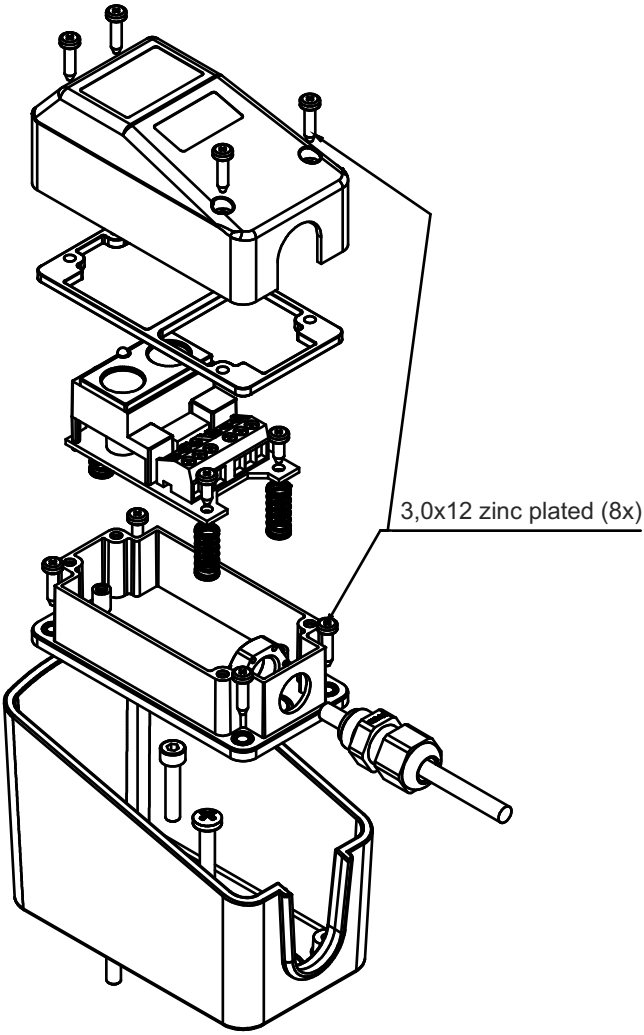
3,0x12 zinc plated (8x)